[Instrument Panel]

(LHD)

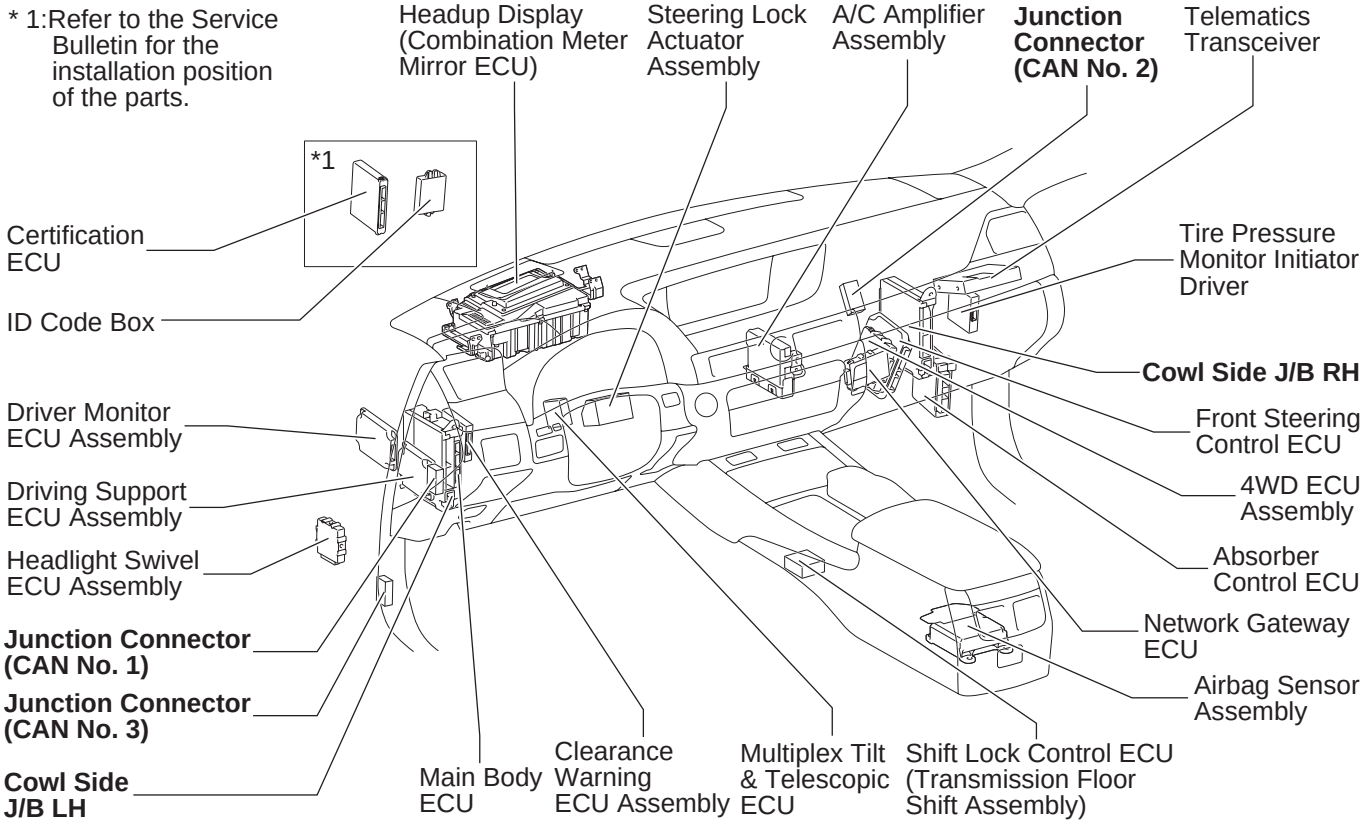
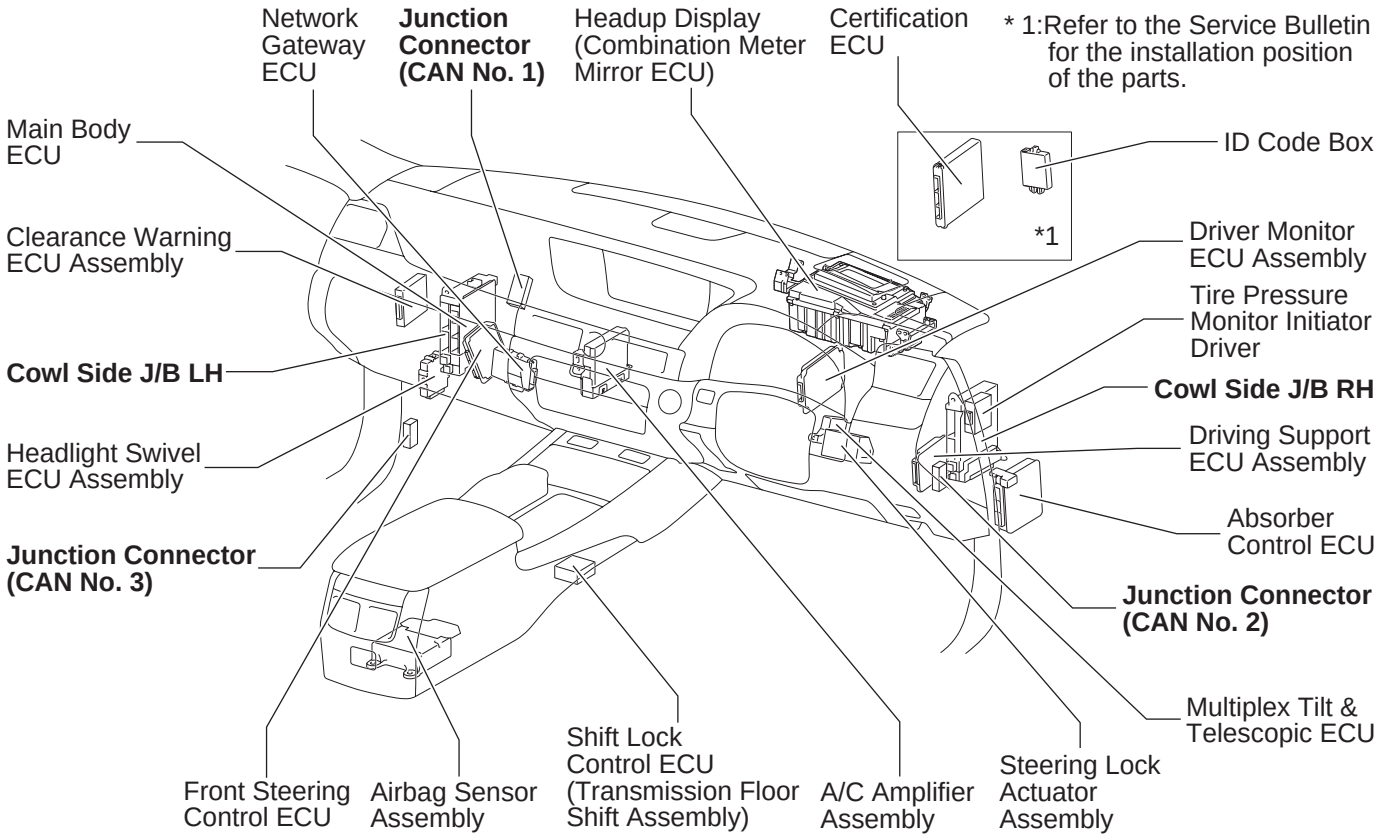
(RHD)